Distributed by

Raymarine

Any reference to Raytheon or RTN in this manual should be interpreted as Raymarine.
The names Raytheon and RTN are owned by the Raytheon Company.

AUTOHELM 800

Autohelm 800 is a highly developed autopilot designed to provide precise powerful steering for sailing yachts up to 30' (9m) LOA.

You will find installing the unit simple and enjoyable using this handbook and a minimum of hand tools.

Cockpit and tiller configurations vary widely and to ensure your Autohelm 800 installation is as neat and secure as possible a full range of fitting accessories is available from authorised Autohelm stockists. Full details are included.

In case of any difficulty please contact your main distributor or Nautech's Technical Sales Department for assistance

Properly installed and operated in accordance with our recommendations the Autohelm 800 will give outstanding performance even under the toughest conditions and become an indispensible member of your crew

Good sailing!

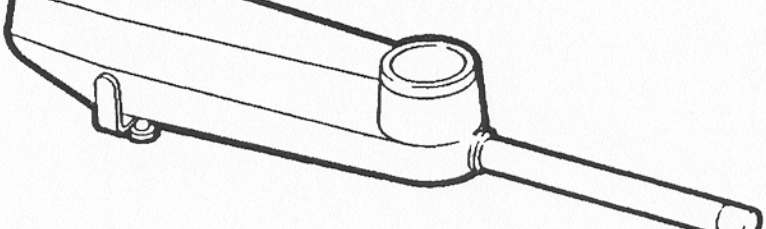

BASIC INSTALLATION

After establishing the three control dimensions the Autohelm 800 can be mounted directly onto the **Starboard** cockpit seat (Fig. 2). Proceed as follows.

TILLER PIN (Cat No. D001)

- Drill 6mm (¼") hole x 25mm (1") deep at point marked;
- Using a two part epoxy such as Araldite epoxy the tiller pin into place;
- Position the shoulder of the pin 12.5mm (½") above the tiller surface.

MOUNTING SOCKET
(Cat No. D002)

- Drill 12.5mm (½") hole x 25mm (1") deep into the **starboard** cockpit seat;
- If the thickness of the mounting position is less than 25mm (1") carefully reinforce the under surface with a plywood plate epoxied into position;
- Install the mounting socket using two part epoxy;

Note The autopilot is capable of generating high pushrod loads. Ensure that:-

- The epoxy is allowed to harden thoroughly before applying any loads;
- All holes are drilled to correct size and where necessary reinforcing is provided.

Fig. 2

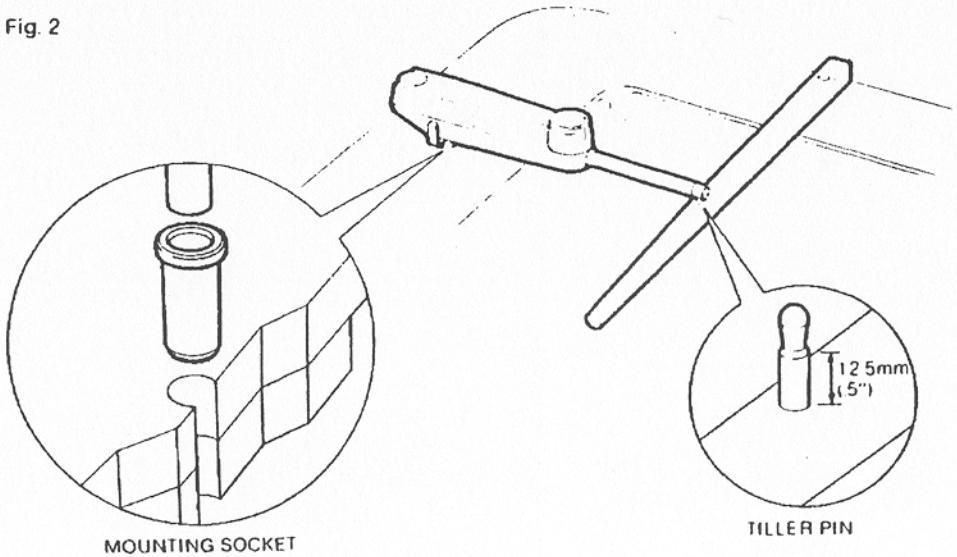

INSTALLATION ACCESSORIES

If it is not possible to install your Autohelm 800 directly onto the cockpit seat/tiller as described above one of the following accessories (or combination) will ensure a perfect installation.

PUSHROD EXTENSIONS (Fig. 3)
The pushrod length may be simply extended using one of the standard pushrod extensions. Install your Autohelm in the standard way except that control dimension **A** is modified as follows:-

Dimension C	Pushrod Extension Lenght L	Cat No.
480mm (19") (STD)	Std dimension	
505mm (20")	25mm (1")	D003
530mm (21")	51mm (2")	D004
556mm (22")	76mm (3")	D005
582mm (23")	102mm (4")	D006
607mm (24")	127mm (5")	D007
632mm (25")	152mm (6")	D008

Fig. 3

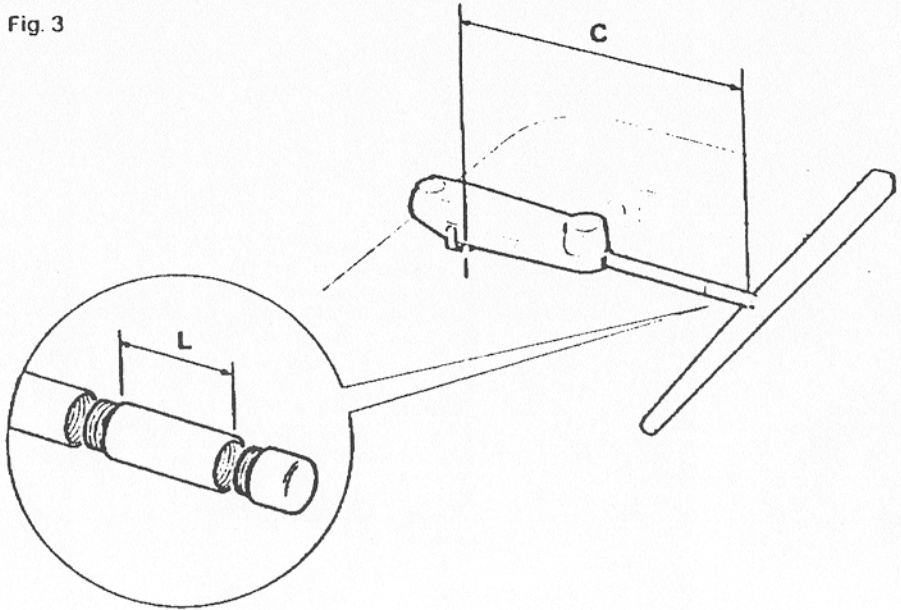

INSTALLATION

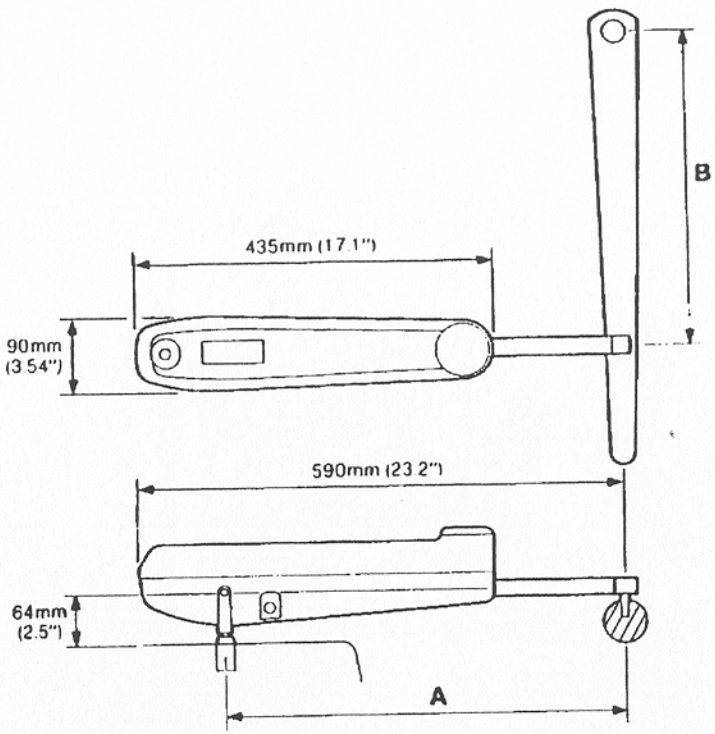

Fig. 1

Autohelm 800 is a totally self contained magnetic sensing automatic pilot. The autopilot is mounted between the tiller and a single attachment point on the yacht's structure. After connection to the yacht's 12 volt electrical system the unit becomes operational.

Since the autopilot incorporates a magnetic sensing device, it is advisable to ensure that the yacht's steering compass is situated at least 750mm (2'6") away to avoid deviation.

For correct installation two basic dimensions are critical (Fig. 1):-

Dimension A = 480mm (19")
mounting socket to tiller pin

Dimension B= 460mm (18")
rudder stock centre line to tiller pin

Clamp the tiller on the yacht's centre line and mark off dimensions **A** and **B** (**A** is measured on the STARBOARD side of the cockpit) using masking tape to locate the fixing points. Ensure the measurements are at right angles as shown.

The Autohelm 800 must be mounted **horizontally.**

SLOPING RUDDERSTOCK

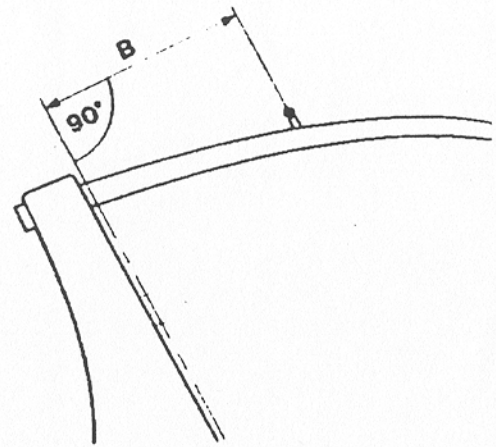

PORTHAND MOUNTING

In certain instances it may be more convenient to mount the unit on the porthand side. The standard unit is sensed to operate on the starboard side of the tiller and, **where porthand mounting is required a special porthand system must be ordered.**

D031

CANTILEVER MOUNTING (Fig. 6)
Where it is necessary to attach the autopilot to a vertical face such as the cockpit sidewall a cantilever socket assembly is used.

The maximum extension offset is 250mm (10") and the cantilever length can be cut to the exact length necessary during mounting.

Installation

- Clamp the tiller on the yacht's centre line.
- Measure dimension **F** (actual)
- Refer to table to establish cutting length for cantilever rod. (Double check measurements **before** cutting).

Dimension F	Cut Length L
610mm (24")	81mm (3.2")
635mm (25")	107mm (4.2")
660mm (26")	132mm (5.2")
686mm (27")	157mm (6.2")
711mm (28")	183mm (7.2")
737mm (29")	208mm (8.2")

- Temporarily assemble the cantilever by screwing the rod into the mounting flange.
- Ensure the Autohelm body is **horizontal** and mark off the location of the mounting flange.
- Mark and drill 3 x 6mm (¼") holes (ignore the two inner holes).
- Mount the flange using 3 x 6mm (¼") diameter bolts with nuts and washers. Be sure to install the backing plate correctly. Bed the flange on a thin coat of silicon sealant.
- Screw the rod firmly into place using a tommy bar.
- Roughen the end of the rod and the inside of the cap to provide a key.
- Apply the two part epoxy provided to the rod end and cap and place the cap over the rod end.
- Ensure the hole for the Autohelm mounting pin is facing **up**.
- Allow the epoxy 30 minutes to fully harden before applying any load.

When the Autohelm is not in use the complete rod assembly may be unscrewed, leaving the cockpit uncluttered.

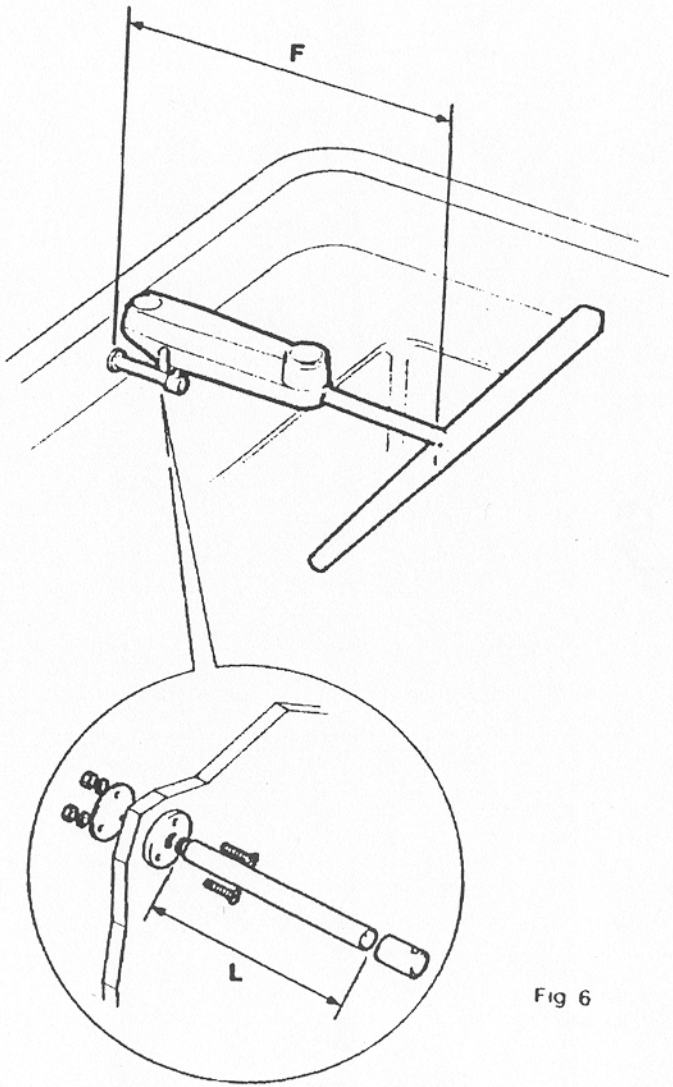

Fig 6

TILLER BRACKETS (Figs. 4 and 5)
Where the height of the tiller above or below the cockpit seat or mounting plane is such that standard mounting is not practical a range of tiller brackets allows the tiller pin offset to be varied.

Installation

- Position the tiller bracket on the centre line (upper/lower) of the tiller and establish control dimensions **A** and **B**
- Mark off the position of the centres of the two fixing bolt holes.
- Drill two holes 6mm (¼") diameter through the centre line of the tiller.
- Install the tiller bracket using 2 x 6mm (¼") diameter bolts, nuts and washers.
- Epoxy the fixing nuts in place.

Dimension D (below tiller)	**Dimension E** (above tiller)	**Cat No.**
25mm (1")	51mm (2")	D009
51mm (2")	76mm (3")	D010
76mm (3")	102mm (4")	D011
102mm (4")	127mm (5")	~~D012~~ D159
127mm (5")	152mm (6")	~~D013~~ D160

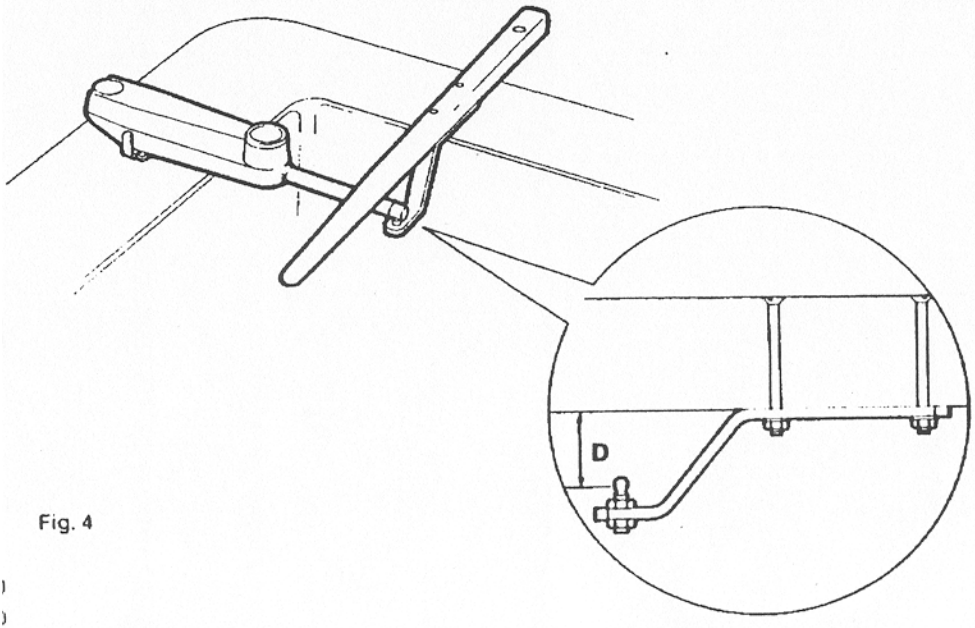

Fig. 4

SLOPING TILLER

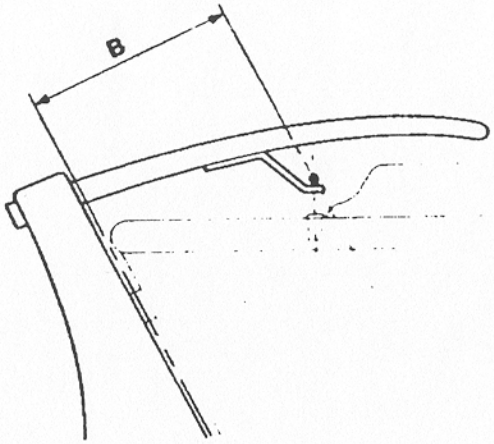

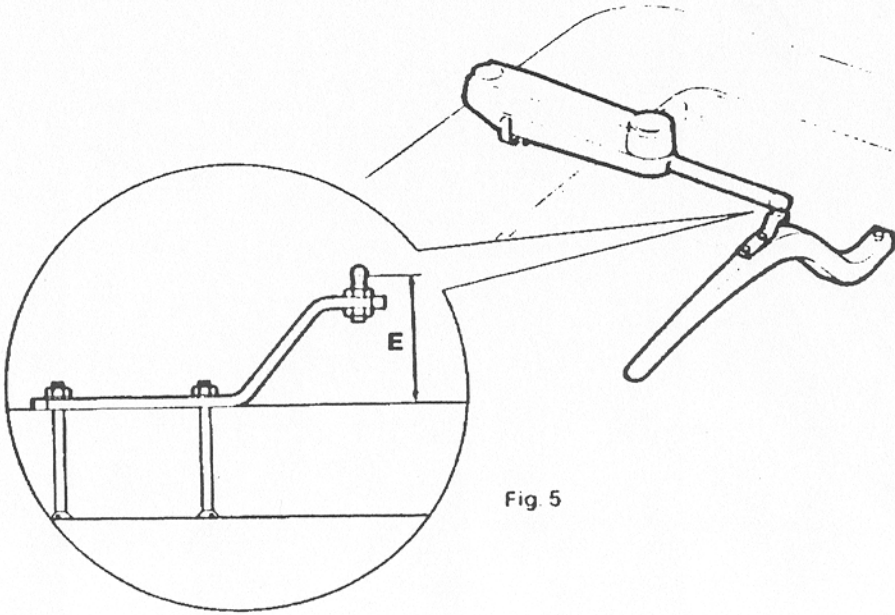

Fig. 5

PEDESTAL SOCKET MOUNTING

It may be necessary to raise the height of the Autohelm mounting socket above the mounting surface. For this a pedestal socket assembly is used.

Selection

- Lock the tiller on the yacht's centre line.
- Establish the standard control dimensions **A** 480mm (19") and **B** 460mm (18").
- Measure dimension **G** (Fig. 7) ensuring the Autohelm actuator is **horizontal**.
- Select the appropriate pedestal socket assembly from the table shown.
- Mark off the position of the mounting flange on the cockpit seat or counter.
- Ensure that control dimensions **A** and **B** are correct.
- Mark and drill 3 x 6mm (¼") diameter holes (ignore the two inner holes).
- Mount the flange using 3 x 6mm (¼") diameter bolts, nuts and washers, being sure the back plate is installed correctly. Bed the flange on a thin coat of silicon sealant (Fig. 8).
- Screw the mounting socket firmly into place.

When the Autohelm is not in use the mounting socket may be unscrewed to leave the cockpit uncluttered.

Dimension G	Pedestal Socket Length L	Cat No.
64mm (2.5")	Std dimension	-
102mm (4.0")	38mm (1.5")	D026
114mm (4.5")	50mm (2.0")	D027
128mm (5.0")	64mm (2.5")	D028
140mm (5.5")	76mm (3.0")	D029
153mm (6.0")	89mm (3.5")	D030

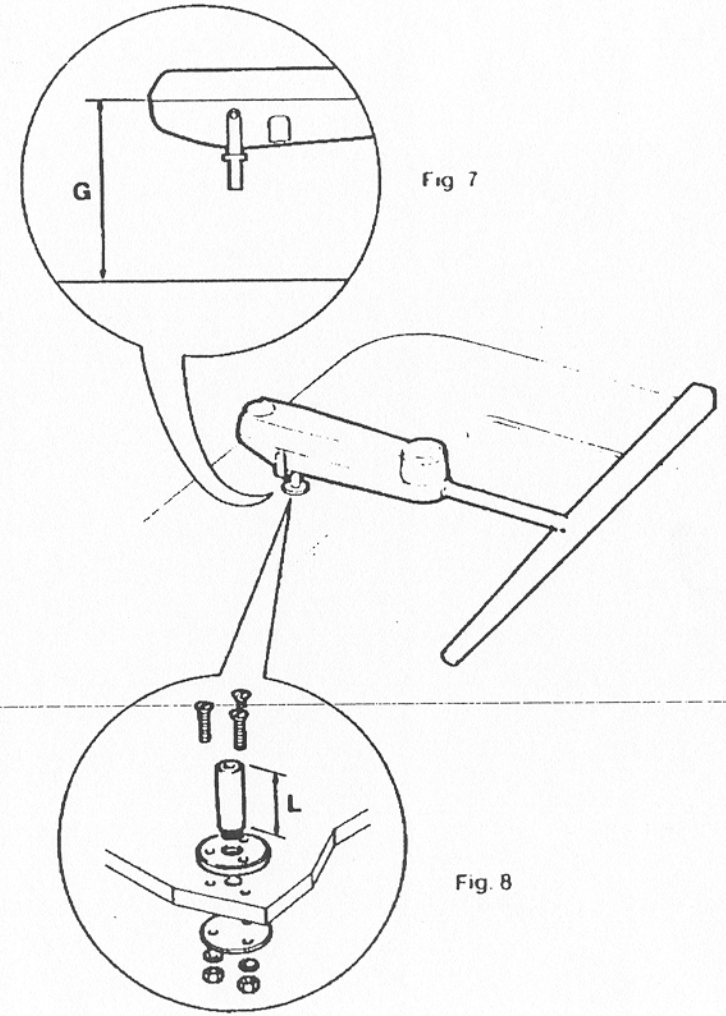

Fig 7

Fig. 8

TILLER PINS
For certain non-standard installations a range of tiller pins is available.

Description	Size	Cat No.
Small threaded tiller pin	25mm (1")	D014
Extra length tiller pin	72mm (2.8")	D020
Extra length threaded tiller pin	72mm (2.8")	D021

Battery Connection
The waterproof 'Dri-Plug' supplied should be situated as close as possible to the Autohelm 800 to minimise lead length. The Dri-Plug socket must be connected **directly** to the vessels electrical distribution panel and on no account paralleled into existing wiring for other equipment.

The Autohelm supply must be independantly switched and protected by a 5 amp fuse or current trip.

The **brown** wire of the Autohelm 800 lead should be connected to **positive.** If connections are accidently reversed the Autohelm 800 will not operate but no damage will result.

FUNCTIONAL TEST PROCEDURE

After completing the installation you should carry out the following functional test to familiarise yourself with the system before attempting sea trials.

The autopilot is fitted with a 3 position thumb operated rotary switch located on the upper case. The autopilot is switched **off** when the thumb control wheel is in the fully anti-clockwise position. The remaining 3 positions of the control switch provide the following functions.

Calm
Selects compass operation for 'calm' weather conditions.

Rough
Selects compass operation for 'rough' sea conditions.

In this position minor yawing motions caused by wave action are neglected. The autopilot will respond only to changes in mean course, and thus the duty cycle and power consumption will be substantially reduced.

Vane
On the Autohelm 800 the **vane** switch position is not used and a mechanical stop prevents the switch passing to this position. DO NOT ATTEMPT TO FORCE THE SWITCH.

OPERATION UNDER COMPASS CONTROL

- Hold the unit towards the tiller and rotate the compass dial until the cardinal point graduations are approximately aligned with your main steering compass.
- Switch to **calm** and note that th north graduation on the compas dial then automatically homes t magnetic north
- Rotate the compass dial in sma increments until the end of the pushrod remains settled over th tiller pin and clutch onto the till Rotate the compass dial clockw to retract the pushrod and anti clockwise to extend it Note tha after making adjustments it is necessary to release the compass dial to allow the compass to realign with the earth's magnetic field
- If the yacht is swinging about it mooring, you will see that small variations in heading cause the unit to apply corrective action t the rudder Now switch to **roug** and note that the frequency of correction action is reduced

OPERATION UNDER SAI

Preferably, initial trials should be carried out in reasonable calm conditions and with plenty of sea room.

The following familiarisation procedure is recommended

Compass control
- Steer into a fixed heading unde engine or sail and hold the course steady.
- Holding the pushrod towards t tiller, rotate the compass dial u it is approximately aligned with the yacht's main steering compass and switch to calm
- Allow the compass to automatically align with the earth's magnetic field and ther adjust the compass dial furthe until the end of the pushrod is approximately positioned over tiller pin

- Clip the pushrod onto the tiller and allow the autopilot to take over.
- After allowing the boat to steady onto an automatically controlled heading, carry out small incremental adjustments to the compass dial until the vessel steadies on to the desired heading. Note that **clockwise** adjustment of the compass dial will alter course to **port**.
- The vessel may now be steered onto any other heading by adjusting the compass dial. If the autopilot appears to be working continuously due to sea conditions, switch over to rough. The rate of working will then reduce substantially.

Disengagement

The pushrod is held into engagement with the tiller pin merely by the weight of the actuator unit. This method of engagement is secure and has been adopted for safety reasons to allow the pushrod to be easily disengaged when manual override becomes necessary.

OPERATING HINTS

Sail balance

It is always advisable when sailing under automatic pilot control to pay strict attention to sail balance. Good sail balance is particularly essential in gusty conditions and strong winds.

When a yacht is sailing badly out of balance, sudden gusts will generally cause it to luff violently to windward. When hand steering, this tendency is corrected by applying sufficient weather helm to hold the original course until the gust subsides. A simple autopilot, however, does not understand the need for weather helm and will, therefore, allow the yacht to luff to windward until sufficient helm is applied to achieve a new state of balance.

Furthermore, it will maintain the luffed heading for as long as the need for increased weather helm persists. Contrary to popular opinion a proportional steering autopilot will not maintain a constant heading when the yacht's balance changes. Thus sailing badly out of balance in varying wind strengths will always give rise to excessive course wander. This tendency is best overcome by reefing the mainsail slightly more than you would when hand steering.

On longer passages when a constant compass course may be steered for hours on end, variations in wind strength and direction will almost certainly cause changes in helm balance. For the same reasons given above, variations in standing helm will cause the autopilot to steer slightly away from the set course. In the case of the Autohelm 800, if 5 degrees of additional weather helm is required as a result of rising wind strength, for example, the course steered by the autopilot will correspondingly change by approximately 20 degrees. Thus when passage making, if a change in compass heading is observed, the original course should ideally be restored by re-trimming sails to obtain the original state of balance. Alternatively, providing weather helm has not become excessive, the yacht may be trimmed back on to the original heading by re-adjusting the autopilot's compass setting.

Watch-keeping

As a final caution: It is very easy to relax permanent watch-keeping, and this temptation must be avoided however clear the sea ahead may appear to be. Remember, that a large ship can cover two miles in five minutes – just the time it takes to brew a cup of coffee!

After use Autohelm 80C is easily stowed by unclipping the pilot from its mounting position.

The unit can then be safely stowed in a small locker.

TOTE BAG

A special zip top padded bag made from tough PVC is available to protect and stow your Autohelm.

Available from Autohelm stockists.

Warning

- Do not stow your Autohelm in a locker liable to flooding by bilge water.
- Do not leave your Autohelm in a locker over the winter lay up period.

MAINTENANCE

All moving parts of the system have been lubricated for life at the factory. Therefore no maintenance whatsoever will be required. Should a fault develop, the entire unit should be returned, in the original packing case for repair and servicing, which will be carried out speedily and at a moderate cost.